Fundamentals of Computer Networks

Understand computer network technology

Lesson 1

Learning Outcome

4.1	**Fundamentals of Computer Networks** *Understand computer network technology.*
Ref.	**Learning Outcome**
4.1.1	Explain the concepts of LAN, WAN, intranet and the structure of the internet.
4.1.2	Understand the concepts of IP addressing and domain name server (DNS).
4.1.3	Explain the need for communication protocols in a network.
4.1.4	Explain how data is transmitted in a packet-switching network.
4.1.5	Explain client-server architecture.
4.1.6	Implement an iterative server with socket programming. Given the server code, students should be able to implement the client code for a given scenario, and vice-versa, e.g. for a tic-tac-toe game.

Introduction

Data Communications

- Exchange of data between two devices via some form of transmission medium such as wire cable.
- 4 fundamental characteristics for effective data communications system:
  - Delivery – The system must deliver data to the correct destination. Data must be received by the intended user and only by the user
  - Accuracy – The system must deliver the data accurately. Data that have been altered in transmission and left uncorrected are unusable.
  - Timeliness – The system must deliver data in a timely manner. Data delivered late are useless.
  - Jitter – Jitter refers to the variation in the packet arrival time.

Components in Data Communications

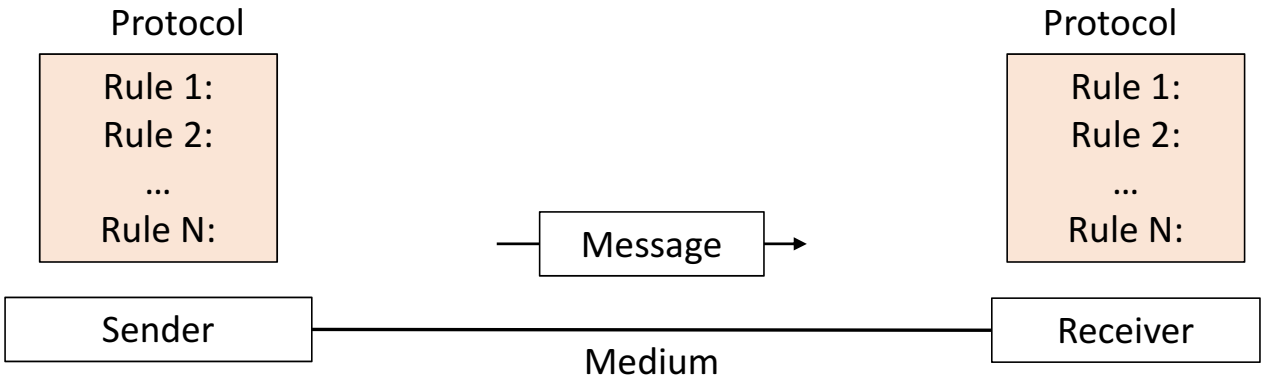

Components in Data Communications

- Message – The message is the information (data) to be communicated
- Sender – The sender is the device that sends the data message
- Receiver – The receiver is the device that receives the message
- Transmission medium – The transmission medium is the physical path by which a message travels from sender to receiver.
- Protocol – A protocol is a set of rules that govern data communications. It represents an agreement between the communicating devices. Without a protocol, two devices may be connected but not able to communicate, just as a person speaking French cannot be understood by a person who speaks only Japanese.

Network

Network

- A network is two or more computers/devices that are connected together for the purpose of communication.
- A computer/device that is not connected to a network is called a stand-alone.
- A device can be a
  - **host** Eg. laptop, cellular phone.
  - **connecting device** Eg. router, switch

Advantage of using Networks

- File sharing - users share files with other users
- Hardware sharing – share hardware such as printer
- Communication –users can communicate via email, chat or video
- Roaming access –users can sign in to any computer on the network and be able to access their files
- Centralized maintenance and updates – apply software updates across a network
- Centralized security – implementation of anti-virus software and firewalls to protect files from risks
- User monitoring – monitor what users do on a network
- Different access level for users – different users can be given different access rights such as restrict user access to certain files

Disadvantages of using Networks

- Cost - additional equipment is needed to allow computers to communicate
- Additional resources to manage network
- Spread of malware – viruses and other forms of malware can easily spread across an improperly secured network
- Hacking – with connected devices, it is possible that data may be accessed without the device owner’s permission

Network Types

Network Types

- Local Area Network (LAN)
  - A LAN is a network that is geographically confined to one building or site. Examples include networks employed by small businesses, small organisations, schools, colleges, universities and in homes.
- Wide Area Network (WAN)
  - A wide area network (WAN) is a network that is spread over a wide geographical area. It can cover more than one site, or be spread across a country, or even the world.
- Internetwork/internet
  - When 2 or more networks (LAN or WAN) are connected, they make an internetwork or internet *.

*internetwork is a private internet (with lowercase i)

Network Types

- Internet
  - The Internet is the global system of interconnected computer networks that uses the Internet protocol suite (TCP/IP) to communicate between networks and devices.
  - It is a network of networks that consists of private, public, academic, business, and government networks of local to global scope, linked by a broad array of electronic, wireless, and optical networking technologies.
- Intranet
  - a private computer network used within an organization to facilitate internal communication, collaboration, and access to company resources. It is restricted to authorized users within the organization.

https://www.youtube.com/watch?v=Dxcc6ycZ73M&t=134s
https://www.nytimes.com/interactive/2019/03/10/technology/internet-cables-oceans.html

OSI Model

Open System Interconnection Reference model

OSI Model

- Open System Interconnection (OSI) model
- A reference model developed by International Organization for Standardization (ISO) that provides a common basis for coordination of standards development for the purpose of systems interconnection.
- 7 layers reference model that defines and separates networking hardware and software into distinct layers and functions
- International Organization for Standardization (ISO)
- An independent, non-governmental, international standard development organization composed of representatives from national standards organizations of member countries.
- ISO attempts to standardize and define items that increase communication and compatibility in many different countries

OSI Reference Model

Layer			Protocol data unit (PDU)	Function
Host layers (end devices, hosts, servers, computers)	7	Application	Data	Interfaces directly with end-user applications, providing network services like email, file transfer, and web access
	6	Presentation		Translates data formats between systems; handles encryption, compression, and encoding.
	5	Session		Establishes, manages, and terminates sessions between applications
	4	Transport	Segment / Datagram	Provides end-to-end communication, error recovery, and flow control
Media layers (network devices, routers, Switches, Network Interface card (NIC))	3	Network	Packet	Manages routing of data packets between devices across different networks
	2	Data link	Frame	Ensures reliable data transfer across the physical link; handles framing, error detection, and MAC addressing
	1	Physical	Bits	Transmission and reception of bitstream over a transmission medium (physical medium)

Responsibilities of Each Layer

- The purpose of each layer in the OSI model is to provide services to the layer above it while shielding the upper level from what happens below.
- The higher layers do not need to know how the data got there or what happened at the lower layers.

Physical Layer

Layer			Protocol data unit (PDU)
Host layers	7	Application	Data
	6	Presentation	
	5	Session	
	4	Transport	Segment / Datagram
Media layers	3	Network	Packet
	2	Data link	Frame
	1	Physical	Bits

- The physical layer coordinates the functions required to carry a bit stream over a physical medium.
  - Deals with the mechanical and electrical specifications of the interface and transmission media.
  - Defines the procedures and functions that physical devices and interfaces have to perform for transmission to occur.
- **Physical characteristics of interfaces and media**. The physical layer defines the characteristics of the interface between the devices and the transmission media. It also defines the type of transmission media.

Physical Layer

- **Representation of bits.** The physical layer data consists of a stream of bits(sequence of 0s or 1s) with no interpretation. To be transmitted, bits must be encoded into signals—electrical or optical. The physical layer defines the type of encoding (how 0s and 1s are changed to signals).
- **Data rate.** The transmission rate, the number of bits sent each second, is also defined by the physical layer. In other words, the physical layer defines the duration of a bit, which is how long it lasts.
- **Synchronization of bits.** The sender and receiver must not only use the same bit rate but must also be synchronized at the bit level. In other words, the sender and the receiver clocks must be synchronized to prevent data loss or corruption.

Physical Layer

- **Line configuration.** The physical layer is concerned with the connection of devices to the media : point-to-point configuration or multipoint configuration.
- **Physical topology.** The physical topology defines how devices are connected to make a network.
- **Transmission mode.** The physical layer also defines the direction of transmission between two devices: simplex, half-duplex, or full-duplex.

Physical Layer – Transmission Media

- **Physical characteristics of interfaces and media**.
- Two broad categories of physical media
  - Wired Transmission
    - Twisted Pair Cable – used in Ethernet LANS (eg. Cat5, Cat6 cables)
    - Coaxial Cable – used in cable TV, older networks
    - Fiber Optic Cable – uses light to transmit data at very high speed over long distance with minimal interference
  - Wireless Transmission
    - Radio Waves – used in Wi-Fi and mobile networks
    - Microwaves – used in satellite and long distance communications
    - Infrared – used in short-range communication (TV remotes)

Physical Layer – Wired Transmission Media

- Twisted Pair Cable – copper cable used for networking purposes. It consist of pairs of insulated wires that are twisted together to reduce interference and crosstalk.
- They are commonly used in Ethernet networks for transmitting data signals.

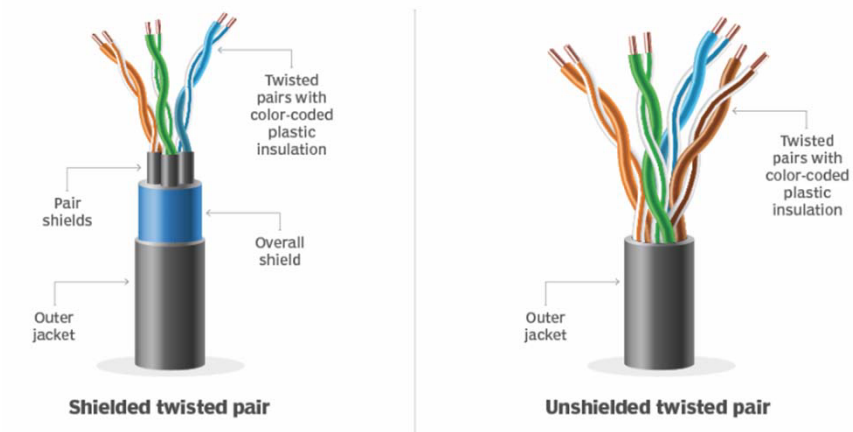

https://www.techtarget.com/searchdatacenter/definition/Categories-of-twisted-pair-cabling-systems

Physical Layer – Wired Transmission Media

Category	Maximum Bandwidth	Maximum Data Rate	Maximum Distance Supported	Common Applications
Cat1	0.4 MHz	1 Mbps	--	Telephone and modem lines
Cat2	4 MHz	4 Mbps	--	Telephone
Cat3	16 MHz	10 Mbps	100 meters	10Base-T Ethernet
Cat4	20 MHz	16 Mbps	100 meters	Token ring
Cat5	100 MHz	100 Mbps	100 meters	100Base-T Ethernet
Cat5e	100 MHz	1 Gbps	100 meters	100Base-T Ethernet Home use
Cat6	250 MHz	1 Gbps	100 meters 37 meters for 10 Gb data rates	Gigabit Ethernet Commercial establishments
Cat6a	500 MHz	10 Gbps	100 meters	Gigabit Ethernet Enterprise data centers Commercial establishments
Cat7	600 MHz	10 Gbps	100 meters	10 Gbps core infrastructure
Cat7a	1,000 MHz (1 GHz)	10 Gbps	100 meters 50 meters for 40 Gb data rates	10 Gbps core infrastructure
Cat8	200 MHz (2 GHz)	Cat8.1: 25 Gbps Cat8.2: 40 Gbps	30 meters	25/40 Gbps core infrastructure

Physical Layer – Wired Transmission Media

- Coaxial Cable – electric cable used for transmitting high-frequency signals. It consists of a central conductor, an insulating layer, a metal shield, and an outer insulating layer.
- The design allows for efficient transmission of high-frequency signals over long distances with minimal interference.

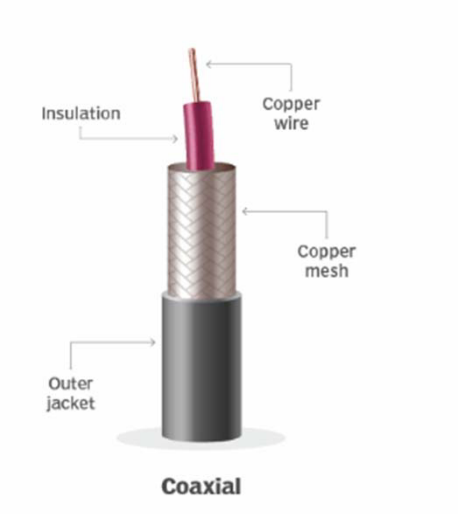

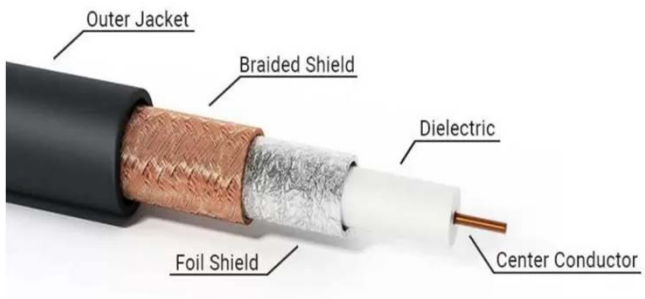

Physical Layer – Wired Transmission Media

- Fiber-Optic Cable – a network cable that transmits data as light pulses through thin strands of glass or plastic, offering high bandwidth and faster speeds compared to traditional copper cables.
- They are widely used in telecommunications and internet connections for long-distance data transmission.

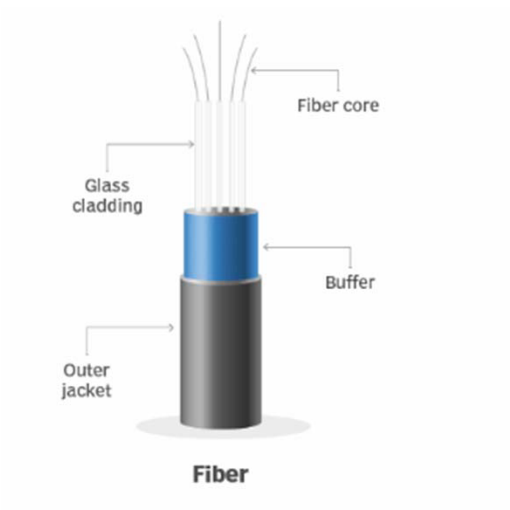

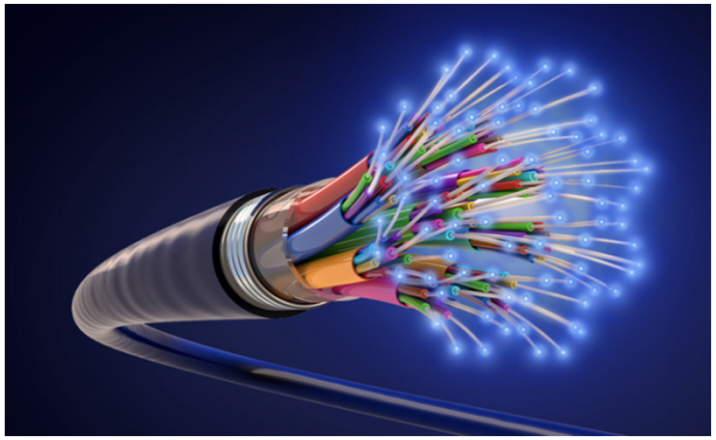

Physical Layer – Wireless Transmission Media

- Radio Waves – a type of electromagnetic radiation, characterized by their long wavelengths and low frequencies within the electromagnetic spectrum. They are used for transmitting information wirelessly over long distances by modulating their amplitude or frequency.
- Some uses of Radio Waves
  - Radio and television broadcasting – audio and video signals
  - Mobile phones – voice and data communication
  - Wireless Networking (Wi-Fi) – wireless networking
  - Satellite Communication – Communication between satellites

Physical Layer

- **Representation of bits.** The physical layer data consists of a stream of bits(sequence of 0s or 1s) with no interpretation. To be transmitted, bits must be encoded into signals—electrical or optical. The physical layer defines the type of encoding (how 0s and 1s are changed to signals).
- Digital signals use discrete voltages (eg. 0V for 0 and 5Vfor 1)
- Analog signals are continuous waveforms that represent data as a continuously varying voltage, current, or electromagnetic field. They are used to transmit information over various media, like telephone lines or radio waves.

Physical Layer

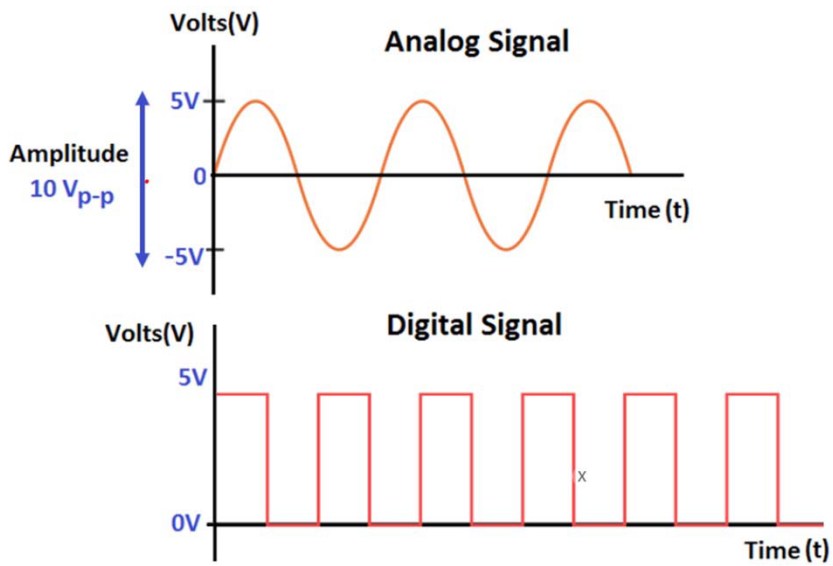

https://instrumentationtools.com/what-are-analog-and-digital-signals-differences-examples/

Physical Layer

- **Line configuration.** The physical layer is concerned with the connection of devices to the media : point-to-point configuration or multipoint configuration.
- **Point-to-point connection**– provides a dedicated link between 2 devices. The entire capacity of the link is reserved for transmission between those two devices

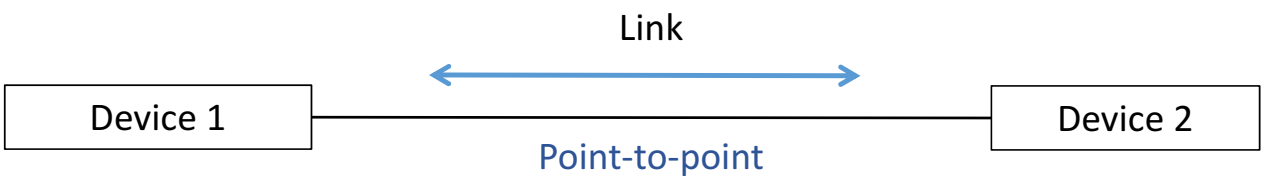

Physical Layer

- **Multipoint / Multidrop connection** - is one in which more than two devices share a single link.
  - In a multipoint environment, the capacity of the channel is shared by several devices, either spatially or temporally.
  - If several devices can use the link simultaneously, it is a spatially shared connection. If users must take turns, it is a timeshared connection.

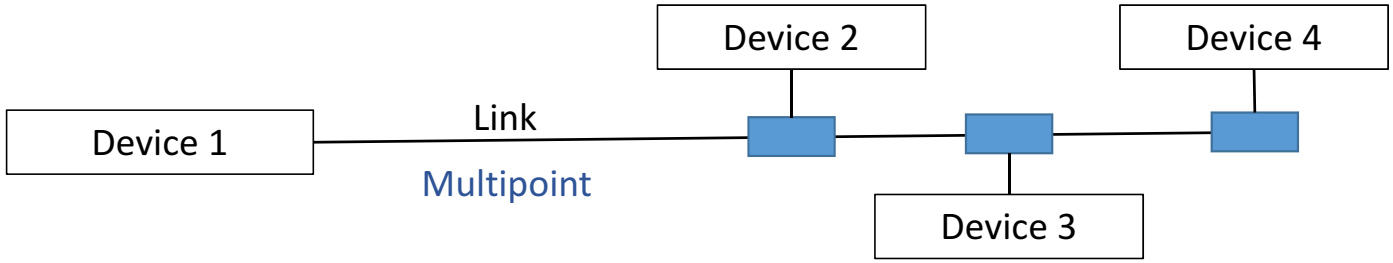

Physical Layer - Topology

- **Physical topology.** The physical topology defines how devices are connected to make a network.
- The topology of a network is the geometric representation of the relationship of all the links and linking devices (nodes) to one another.
- 4 basic topologies:
  - Mesh Topology
  - Star Topology
  - Bus Topology
  - Ring Topology

Physical Layer - Mesh Topology

- Every device/node has a dedicated point-to-point link to every other device.
- Each device/node is connected to n-1 devices/nodes in a fully connected mesh network with n nodes.

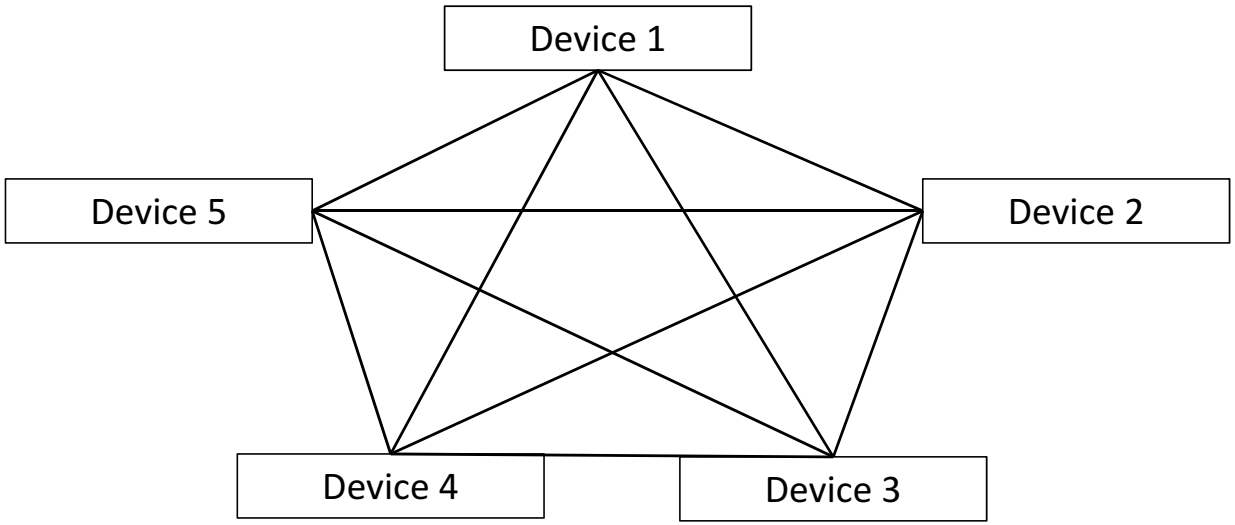

Physical Layer - Star Topology

- Every device/node has a dedicated point-to-point link to the central controller.
- The devices are not directly linked to one another and does not allow direct traffic between devices.

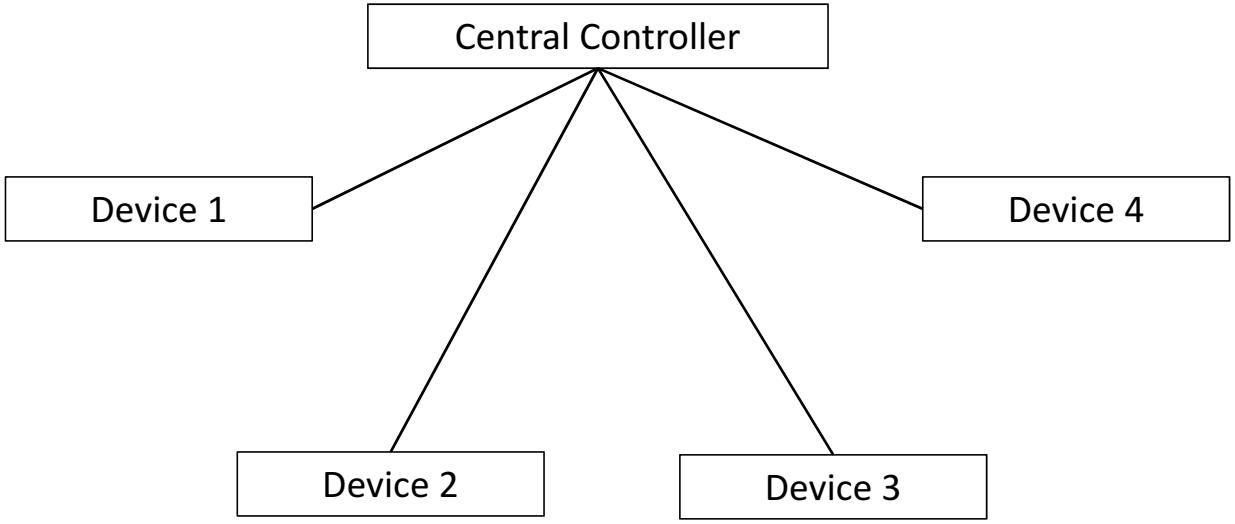

Physical Layer - Bus Topology

- A multipoint connection
- A long cable acts as a backbone to link all devices in a network.
- Device are connected to the bus cable by drop lines and taps.

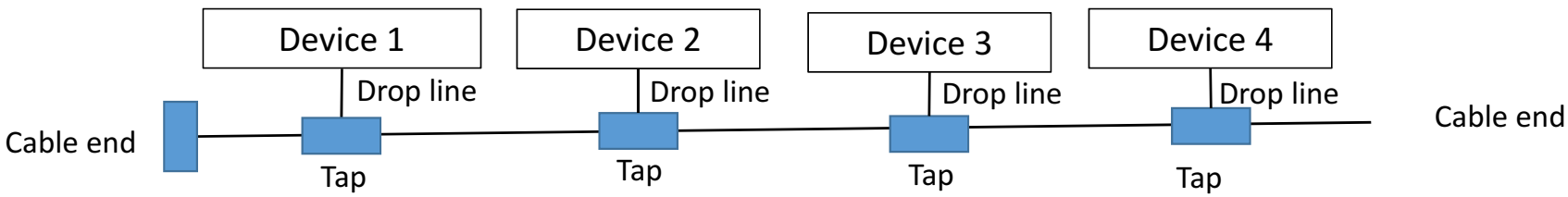

Physical Layer - Ring Topology

- Each device has a dedicated point-to-point connection with 2 other devices on either side of it.
- A signal is passed along the ring in one direction, from device to device, until it reaches its destination.
- Repeater regenerates the bits and pass them along.

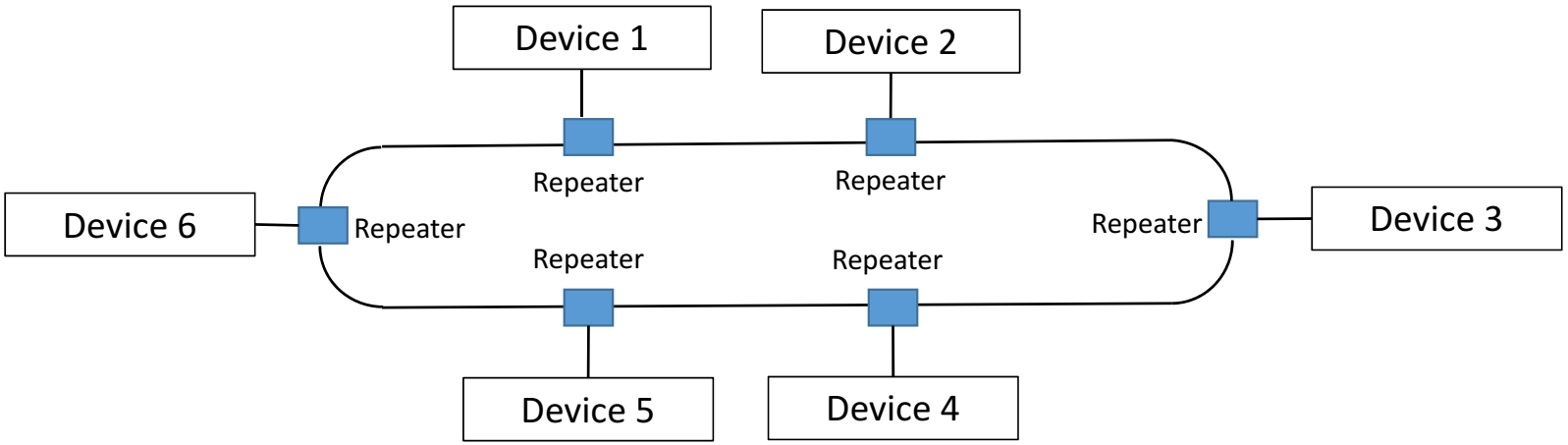

Physical Layer

- **Transmission mode.** The physical layer also defines the direction of transmission between two devices: simplex, half-duplex, or full-duplex.
- Simplex
  - In simplex mode, the communication is unidirectional.
  - Only one of the two devices on a link can transmit; the other can only receive.
  - Eg. Keyboards and monitors.

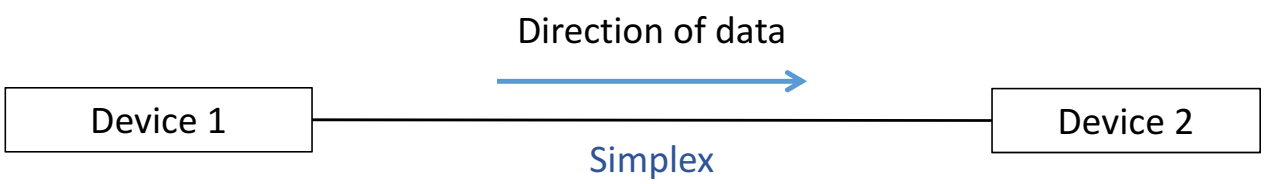

Physical Layer –Transmission mode

- Half-duplex
  - In half-duplex mode, each device can both transmit and receive, but not at the same time.
  - When one device is sending, the other can only receive, and vice versa.
  - Eg. Walkie-talkies

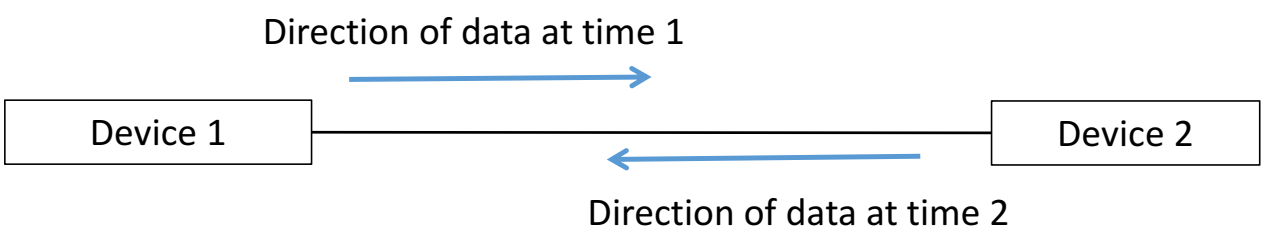

Half-duplex

Physical Layer –Transmission mode

- Full-duplex
  - In full-duplex mode, both stations can transmit and receive simultaneously.
  - In full-duplex mode, signals going in one direction share the capacity of the link with signals going in the other direction.
  - Eg. Telephone network. Both can talk and listen at the same time.

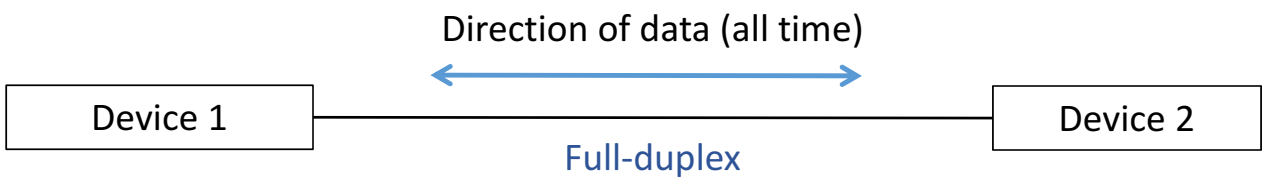

Data link Layer

Layer			Protocol data unit (PDU)
Host layers	7	Application	Data
	6	Presentation	
	5	Session	
	4	Transport	Segment / Datagram
Media layers	3	Network	Packet
	2	Data link	Frame
	1	Physical	Bits

- The data link layer is responsible for enabling direct communication between two devices on the same local network, it oversees the delivery of the packet between the two devices.
- It packages the data into frames (Framing), handles error detection, and control how devices access the physical medium.
- **Physical addressing**. If frames are to be distributed to different systems on the network, the data link layer adds a header to the frame to define the sender and/or receiver of the frame. If the frame is intended for a system outside the sender's network, the receiver address is the address of the connecting device that connects the network to the next one.

Data link Layer

- It organizes data into frames. Each frame includes:
  - Header with MAC address of the source and destination
  - Payload (actual data)
  - Trailer with error-checking information
- **Flow control.** If the rate at which the data is absorbed by the receiver is less than the rate produced at the sender, the data link layer imposes a flow control mechanism to prevent overwhelming the receiver.

Data link Layer

- **Error control.** The data link layer adds reliability to the physical layer by adding mechanisms to detect and retransmit damaged or lost frames. It also uses a mechanism to recognize duplicate frames. Error control is normally achieved through a trailer added to the end of the frame.
- Error detection methods :
  - Parity bits – simple checks to detect single-bit errors.
  - Checksums – summing values to detect corrupted data.
  - CRC (Cyclic Redundancy Check) – a technique to detect errors caused by noise or interference.
- If an error is found, the frame is typically discarded, and higher layers may request a retransmission.

Data link Layer

- **Access control.** When two or more devices are connected to the same link, data link layer protocols are necessary to determine which device has control over the link at any given time.
- Uses Media Access Control (MAC) protocol to avoid collisions:
  - Carrier Sense Multiple Access with Collision Detection (CSMA/CD)
    - Used in wired Ethernet (older systems).
    - Devices listen before transmitting and detect collisions
  - Carrier Sense Multiple Access with Collision Avoidance (CSMA/CA)
    - Used in wireless networks.
    - Devices avoid collisions by waiting for a clear signal before sending data

Data link Layer

- The Data Link Layer is usually split into two sublayers:
  - LLC (Logical Link Control)
    - Provide interface with network layer (upper layer)
    - Handle error checking and flow control
  - MAC (Media Access Control)
    - Handles channel access (e.g., CSMA/CD, CSMA/CA).
    - Physical addressing for various protocols (Ethernet, Wi-Fi)

- Ethernet and Wi-Fi include both MAC and LLC functionality.

Data link Layer – Protocols

Protocol	Type of Network	Description / Use
Ethernet (IEEE 802.3)	Wired LAN	Most widely used in local area networks; uses MAC addresses and supports CSMA/CD.
Wi-Fi (IEEE 802.11)	Wireless LAN	Wireless equivalent of Ethernet; handles wireless access and security.
PPP (Point-to-Point Protocol)	Point-to-point links	Used in direct connections between two nodes (e.g., dial-up, VPN).
HDLC (High-Level Data Link Control)	Point-to-point links	Cisco-proprietary and standardized protocol for synchronous links.
Frame Relay	WAN	A now mostly outdated protocol used in wide-area networks.
ATM (Asynchronous Transfer Mode)	WAN	Uses fixed-size cells for data transfer; was used in telecom backbones.
FDDI (Fiber Distributed Data Interface)	LAN	Used fiber optics; now largely obsolete.
Token Ring (IEEE 802.5)	LAN	Obsolete LAN protocol where nodes take turns to transmit using a token.
CAN (Controller Area Network)	Automotive / Embedded	Used in vehicles and industrial systems for short-distance, reliable communication.
Bluetooth (IEEE 802.15.1)	PAN (Personal Area Network)	Short-range wireless protocol for device communication.
Zigbee (IEEE 802.15.4)	Wireless sensor networks	Low-power, low-data-rate protocol for IoT applications.

Data link Layer – Ethernet Frame

- Preamble: this is a 7-byte pattern of ones and zeroes and is used for synchronization.
- SFD: the “start frame delimiter” marks the end of the preamble and tells the receiver that the next fields will be the actual Ethernet frame, starting with the destination field.
- Destination: the destination MAC address of the receiver.
- Source: the source MAC address of the device that sent the frame.
- Type: what is carried inside the Ethernet frame. An IPv4 packet, IPv6 packet etc
- Data: the actual data that we are trying to transmit, eg. IPv4 packet.
- FCS: frame check sequence helps the receiver to figure out if the frame is correct or corrupt.

The fields marked in green are what we call the Ethernet header.

Data link Layer – MAC Address

- Media Access Control (MAC) addresses (physical address) eg. 00:1A:2B:3C:4D:5E
- A 48-bit (6-byte) hardware address
- Usually written in hexadecimal and divided into 6 groups of 2 hex digits, separated by :
  - Colons (:) eg. 00:1A:2B:3C:4D:5E
  - hyphens (-) eg. 00-1A-2B-3C-4D-5E
  - no separators eg. 001A2B3C4D5E

Data link Layer – MAC Address

- First 3 bytes (00:1A:2B) - OUI (Organizationally Unique Identifier): identifies the manufacturer
- Last 3 bytes (3C:4D:5E) - Device-specific identifier, assigned by the manufacturer.
- Each network device has a unique MAC address.
- Hardcoded into Network Interface Card (NIC)
- Used in Ethernet and Wi-Fi for local addressing (within same network/LAN)
- When a device send an Ethernet frame, it will add its own MAC address as the source and the receiver MAC address as the destination.

Network Layer

Layer			Protocol data unit (PDU)
Host layers	7	Application	Data
	6	Presentation	
	5	Session	
	4	Transport	Segment / Datagram
Media layers	3	Network	Packet
	2	Data link	Frame
	1	Physical	Bits

- The network layer is responsible for the source-to-destination delivery of a packet, possibly across multiple networks. Whereas the data link layer oversees the delivery of the packet between two systems on the same network, the network layer ensures that each packet gets from its point of origin to its final destination.
- The network layer does not recognize any relationship between the packets. It treats each one independently, as though each piece belonged to a separate message.

Network Layer

- If two host are connected to the same network, there is no need for a network layer.
- If the two systems are attached to different networks with connecting devices (routers) between the networks, there is a need for the network layer to accomplish source-to-destination delivery.

Network Layer – Other responsibilities

- **Logical addressing.** If a packet passes the network boundary, the network layer adds a header to the packet coming from the upper layer that includes the logical addresses of the sender and receiver. The logical address helps to help distinguish the source and destination systems.
- **Routing.** When independent networks or links are connected together to create internetworks (network of networks) or a large network, the connecting devices (called routers or switches) route or switch the packets to their final destination. Network layer provides this mechanism.

Transport Layer

Layer			Protocol data unit (PDU)
Host layers	7	Application	Data
	6	Presentation	
	5	Session	
	4	Transport	Segment / Datagram
Media layers	3	Network	Packet
	2	Data link	Frame
	1	Physical	Bits

- The transport layer is responsible for process-to-process delivery of the entire message. A process is an application program running on the host.
- The transport layer ensures that the whole message arrives intact and in order, overseeing both error control and flow control at the source-to-destination level.

Transport Layer – Other responsibilities

- **Service-point addressing**. Computers often run several programs at the same time. For this reason, source-to-destination delivery means delivery not only from one computer to the next but also from a specific process (running program) on one computer to a specific process (running program) on the other.
- The transport layer header must therefore include a type of address called a service-point address (or port address). The network layer gets each packet to the correct computer; the transport layer gets the entire message to the correct process on that computer.

Transport Layer – Other responsibilities

- **Segmentation and reassembly**. A message is divided into transmittable segments, with each segment containing a sequence number. These numbers enable the transport layer to reassemble the message correctly upon arriving at the destination and to identify and replace packets that were lost in transmission.
- **Connection control.** The transport layer can be either connectionless or connection oriented. A connectionless transport layer treats each segment as an independent packet and delivers it to the transport layer at the destination machine. A connection oriented transport layer makes a connection with the transport layer at the destination machine first before delivering the packets. After all the data are transferred, the connection is terminated.

Transport Layer – Other responsibilities

- **Flow control.** Like the data link layer, the transport layer is responsible for flow control. However, flow control at this layer is performed end to end rather than across a single link.
- **Error control.** Like the data link layer, the transport layer is responsible for error control. However, error control at this layer is performed process-to-process rather than across a single link. The sending transport layer makes sure that the entire message arrives at the receiving transport layer without error (damage, loss, or duplication). Error correction is usually achieved through retransmission.

Session Layer

Layer			Protocol data unit (PDU)
Host layers	7	Application	Data
	6	Presentation	
	5	Session	
	4	Transport	Segment / Datagram
Media layers	3	Network	Packet
	2	Data link	Frame
	1	Physical	Bits

- Provide the ability to the presentation entities to organize the communication for multiple communication sessions taking place at the same time.
- **Session initiation and teardown.** The session layer is responsible for starting the sessions between the communicating entities. And when the session is over, the session layer is responsible for the release of the communication. Data transfer takes place in-between.

Session Layer

- **Token management.** This function is related to the communication mode used in the specific session (simplex, half-, or full-duplex). The session layer controls which entity own the token and can transmit data at this time. The token is the license to transmit in an environment or service where only one entity can transmit at a time. This is not the case for all applications. Some applications operate in full-duplex mode, others operate in half-duplex mode.
- **Session-connection to transport-connection mapping (in connection-oriented transfer only)** The function provides the session layer the ability to map between the transport layer connections and the sessions currently taking place. This way the session layer can tell which data goes to what session.

Presentation Layer

Layer			Protocol data unit (PDU)
Host layers	7	Application	Data
	6	Presentation	
	5	Session	
	4	Transport	Segment / Datagram
Media layers	3	Network	Packet
	2	Data link	Frame
	1	Physical	Bits

- Responsible for the way data is presented to the application. At the start of the communication, the presentation layer negotiates the form of data to be transferred with the other entity, the transfer syntax. After this negotiation, the presentation layer can provide additional services such as compression, encryption, and translation. The choice of which service(s) to be used is up to the application itself.

Application Layer

Layer			Protocol data unit (PDU)
Host layers	7	Application	Data
	6	Presentation	
	5	Session	
	4	Transport	Segment / Datagram
Media layers	3	Network	Packet
	2	Data link	Frame
	1	Physical	Bits

- Defining the services presented at the user-end.
- Main functions:
  - Identification of services provided to the user
  - Defining QoS parameters required for the application
  - Defining security mechanisms to be employed - access control, authentication
  - Synchronization of communication applications (connection-oriented services)

OSI Model

Data Encapsulation/ Decapsulation

Describes how data is wrapped with headers/trailers as it moves **down** the OSI layers (encapsulation) and **unwrapped** as it moves **up** the layers (decapsulation) during transmission and reception.

Data Encapsulation

- The flow of data from the application layer to the physical layer is called encapsulation.
- Header and trailer information is added to the data in various layers at the end and start of date.

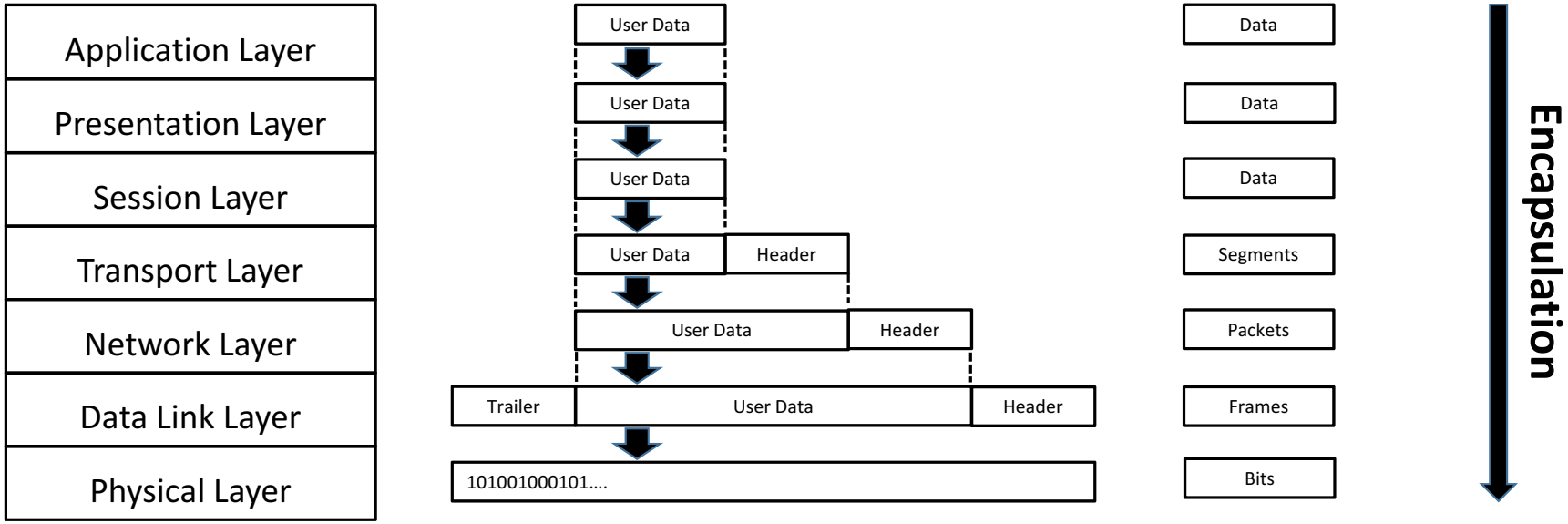

Data Decapsulation

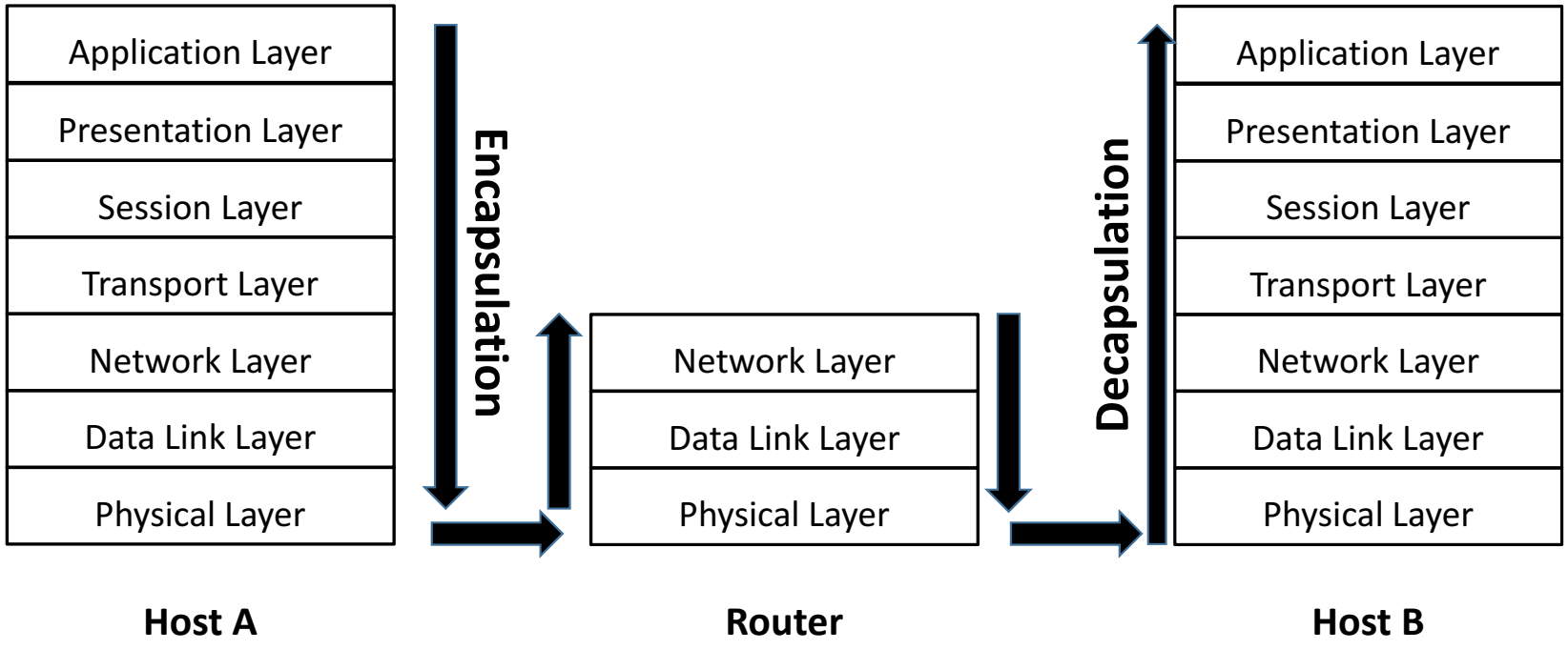

OSI Model

End-to-End Data flow

Walks through how data is prepared, sent, routed, and received using the OSI model—from **Host A** to **Router(s)** to **Host B**.

End-to-End Data Flow (Host A Source)

- Transmission starts from application layer at Host A. The application decides that it needs to communicate with Host B and passes the data down to the presentation layer.
- The presentation layer does the required transformations that need to be done on data, like compression, encryption, or translation. Then the data is passed down to the session layer.
- The session layer starts initiating the communication session and passes the data to the transport layer.

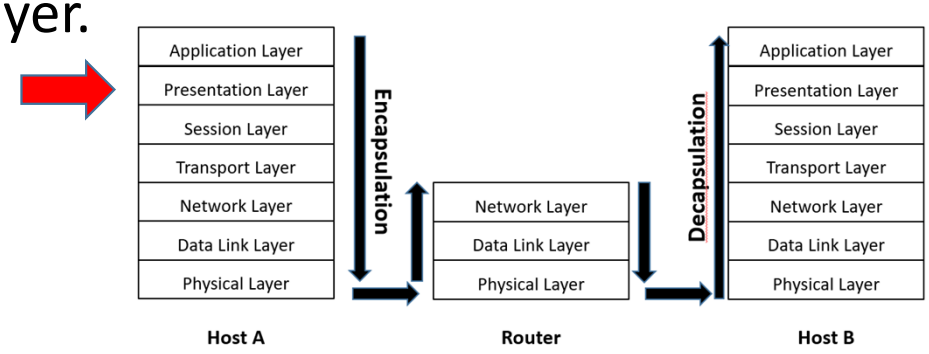

End-to-End Data Flow (Host A Source)

- At the transport layer, the data is segmented and a header is added to each segment of the data.
- This header contains transport control information such as the sequence number and acknowledgement number.
- The segment along with its header is passed down to the network layer.
- The header added by the transport layer is meant to be read by the transport layer at the receiving end.

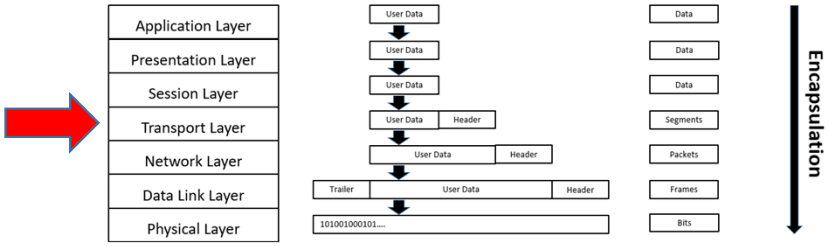

End-to-End Data Flow (Host A Source)

- The network layer deals with the whole segment, including its header, as data.
- The network layer does not read the segment header, but instead, it handles the segment and its header as a single data element.
- The data is then put into packets and headers are added to these packets.
- The network layer header contains information meant to reach the network layer on the other end.

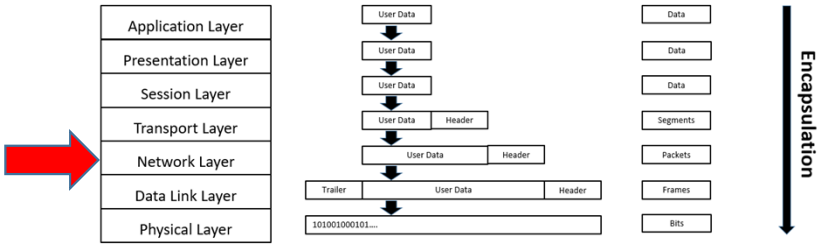

End-to-End Data Flow (Host A Source)

- This information includes a source and destination network-layer address along with few other parameters. These packets are sent down to the data-link layer.
- The data-link layer handles the packet and its header as a single data element, such that the network layer header is considered part of the data.
- The data-link layer puts the data into frames and adds a header and a trailer to each frame. eg. Ethernet frame

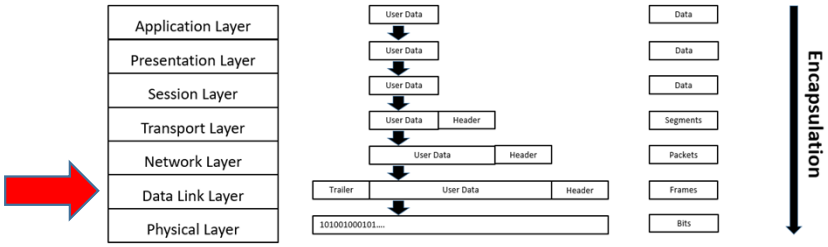

End-to-End Data Flow (Host A Source)

- The data-link header contains control information sent to the data-link layer on the other end, while the trailer usually contains error control information.
- The frames are then sent down to the physical layer where they are dealt with as raw bits. These bits are transferred through the physical channel to the router.

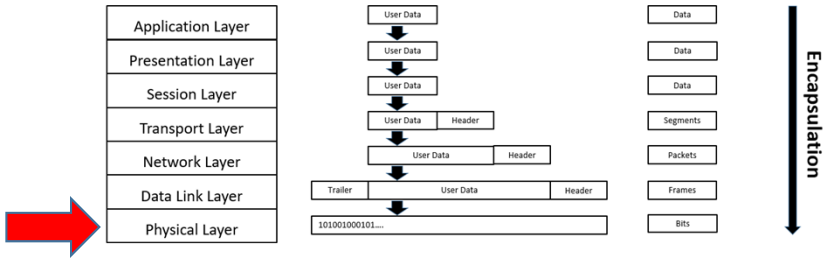

End-to-End Data Flow (Router)

- The router does a partial decapsulation because it does not need to read the data all the way up to its application-layer shape.
- The router needs only to read up to the network layer header to route the data to the destination.

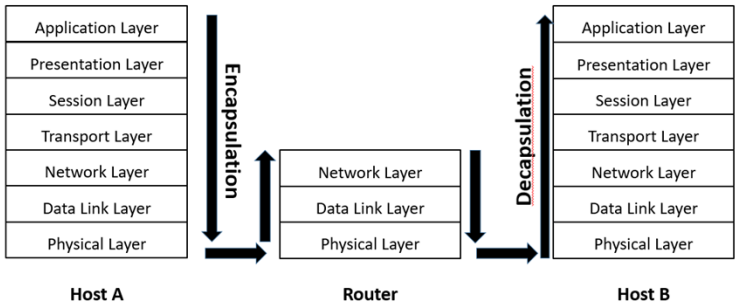

End-to-End Data Flow (Router)

- The process starts at the physical layer when the data is received as raw bits. These bits are then gathered into frames and sent over to the data-link layer.
- The data link layer reads the header and the trailer to know what to do with the data. The data-link layer then rips off the header and the trailer and sends the rest of the data as a packet to the network layer.

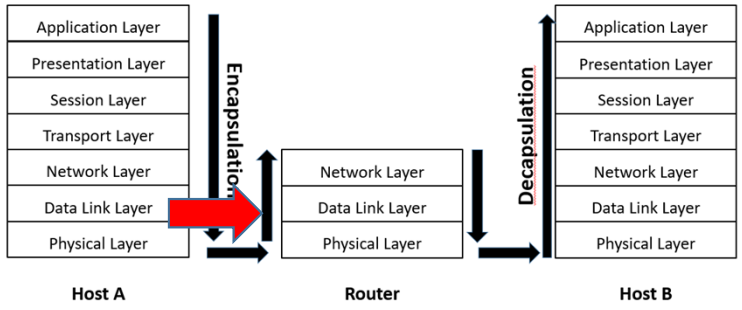

End-to-End Data Flow (Router)

- At the network layer, the network header is read to determine the destination network address. After knowing the destination network address, the router chooses the best route to send the data to the destination host.
- Starting from the network layer, the encapsulation starts again at the router. Data goes down the data-link and physical layers and all the way through the physical link to the destination host.

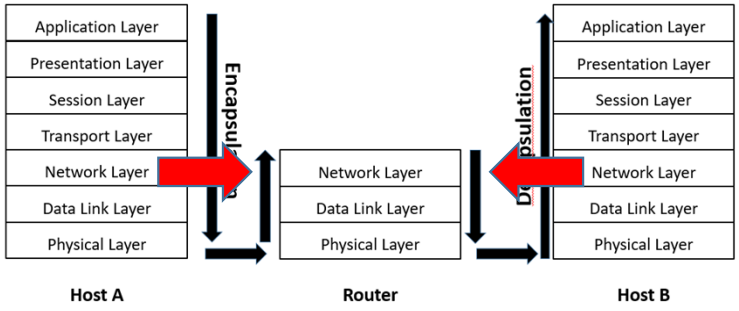

End-to-End Data Flow (Router)

- If there is another router in the way, the same process that took place in the first router is repeated until reaching the destination host.

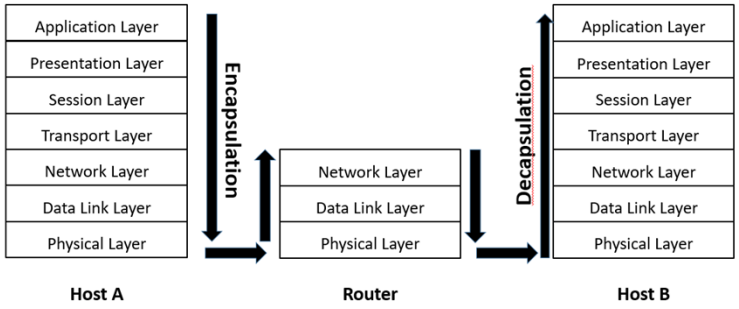

End-to-End Data Flow (Host B Destination)

- At the destination host, the raw bits are elevated as frames to the data-link layer.
- The header and trailer of each frame are read by the data-link layer and then removed. The rest of the data is elevated to the network layer as packets.

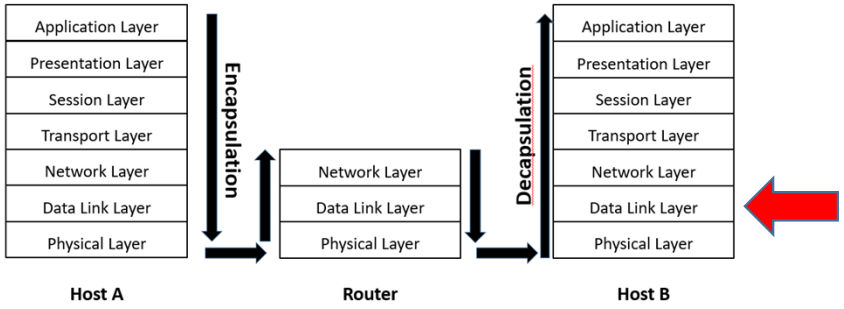

End-to-End Data Flow (Host B Destination)

- The header of the packet is read to determine if this is the correct destination for the packet and other network control information is also taken from the network layer header. The header is then removed and the rest of the data is elevated to the transport layer as segments.

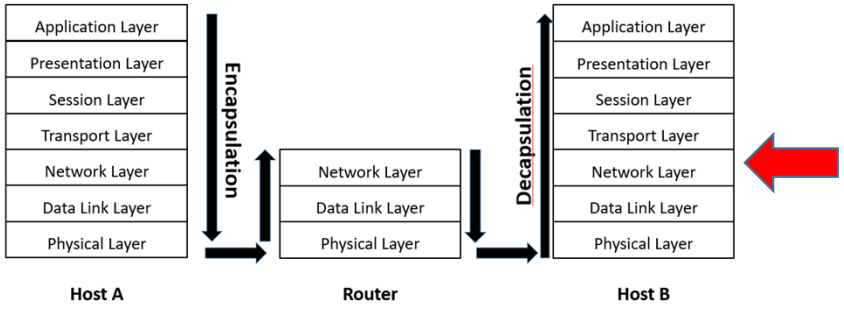

End-to-End Data Flow (Host B Destination)

- The header of each segment is read to determine the sequence number and arrange the segments in their correct order. Then, the header is also removed and the rest of the data is elevated to the session layer.
- The transport header also contains information of which session this data is going to. This information is passed to the session layer with the data.

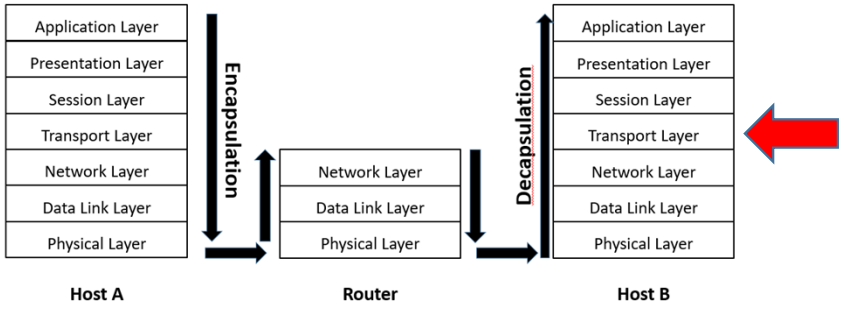

End-to-End Data Flow (Host B Destination)

- The session layer determines if this is the end of this session or not. If it is the last segment in the session, the session layer will wait for the request to end this session. If this is not the last segment in the session, the session layer waits for more data.

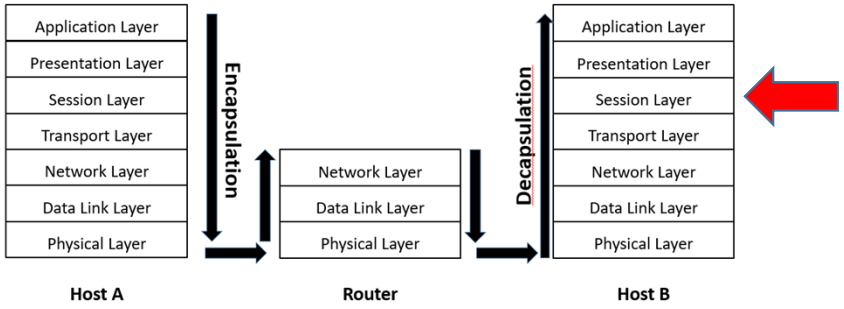

End-to-End Data Flow (Host B Destination)

- The data is then passed to the presentation layer to retransform the data into the shape that they were sent in by the sending-end application or to another form determined by the application. This might involve decompression, decryption, or translation.
- The data is then transferred to the application and received by the user.

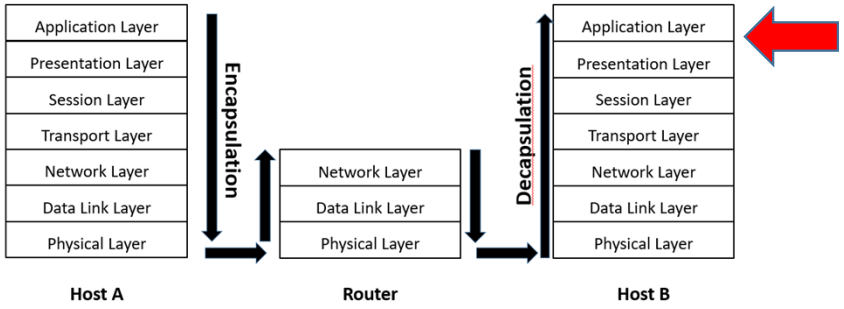

End